MITSUBISHI POWER

LSIOS01 I/O scanner card

Gigabit Ether 1000BASE-T specification compliant

■Summary

＊Main function	:	GbE-LVDS communication bridge
＊Operating ambient temperature range	:	-5 to 60℃
＊User interfaces		
・ Ethernet (1000BASE-T)	:	2 in total
・ Micro SD slots	:	1 in total
・ USB mini-B connector	:	1 in total
・ Switches	:	2 in total
- Reset switch		
- Abort switch		

MITSUBISHI POWER

LSIOS01 I/O scanner card

Gigabit Ether 1000BASE-T specification compliant

■Specification

ITEM		SPECIFICATION
Function		LVDS input-output communication Giga-bit Ethernet ring communication
Communication rate (LVDS)		100 Mbps
Number of addressing nodes		Max 96 nodes
EEPROM		2 kbit (For initial setting information of MAC address)
Ethernet interface		1000BASE-T : 2
Serial interface		USB Serial (USB miniB connector) : 1
User interface		Micro SD card : 1 Abort switch : 1 Reset switch : 1
Controller		Spartan6
Self diagnosis		Clock abnormal check CRC check (FPGA) Memory check Power voltage check Configuration check
Data check method		CRC32
Indications		4: Power / Status / Mode / Access
Hot-swapping		Supported (*Note that emergency stop signal processing must be handled by user circuity)
Rated voltage		DC 24 V ±20% (Supplied from backplane)
Environmental conditions	Module ambient temperature	(Operating) -5 to 60℃
		(Storage) -40 to 85℃
	Module ambient humidity	(Operating / Storage) 95% RH or less (No condensation)
Vibration		3.5 mm at 5 to 8.4 Hz, 1 G at 8.4 to 150 Hz
Shock		15 G 11 ms
Rated Current		272 mA
Weight		240 g or less
Size		112 mm (D) x 177.8 mm (H) x 25.8 mm (W) (Except projection)
Standard/Directive		EN 61131-2:2007, RoHS

About compliant module type

For compliant modules of this product, please refer to " Compliant backplane list (CGS-S9901-E-XX) ".

MITSUBISHI POWER

LSIOS01 I/O scanner card

Gigabit Ether 1000BASE-T specification compliant

■Block diagram

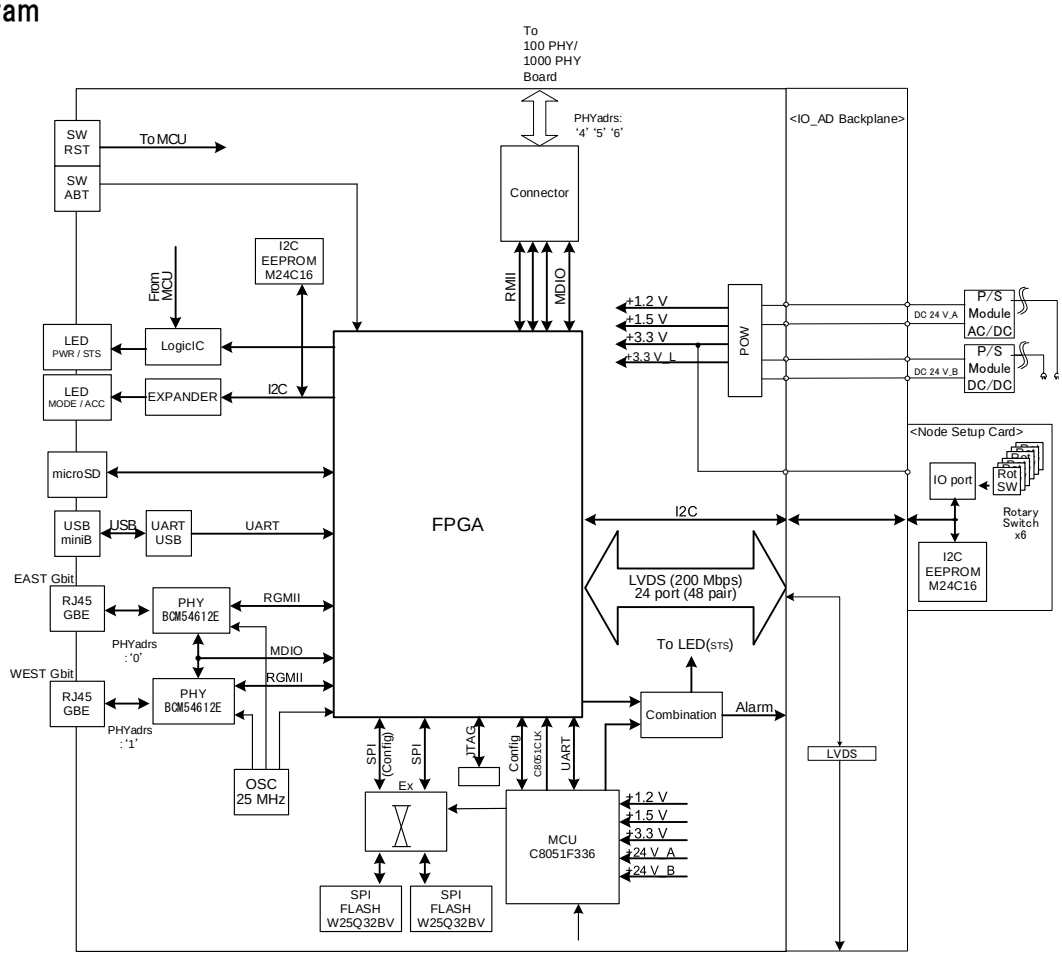

P/S	;	Power Supply
IO_AD	;	Input/Output_Adapter
LVDS	;	Low Voltage Differential Signaling
FPGA	;	Field Programmable Gate Array
MCU	;	Micro controller Unit
Flash	;	Flash memory
CLK	;	Clock Oscillator
OSC	;	Oscillator
RST	;	Reset
LED	;	Light Emitting Diode
ABO	;	Abort
POW	;	Power
STS	;	Status
GBE	;	Giga bit Ether
UART	;	Universal Asynchronous Receiver Transmitter
EEPROM	;	Electrically Erasable Programmable Read-Only Memory
SPI	;	Serial Peripheral Interface
DDR3	;	Double Data Rate3
I2C	;	Inter-Integrated Circuit
JTAG	;	Joint Test Action Group
SW	;	Switch
PHY	;	Physical layer

When using, please read the instruction manual attached to the product carefully and use it properly.
This catalog may not be distributed or reproduced in whole or in part without permission.
Please be aware that due to product improvements and modifications, the product description in this catalog may differ in certain respects from the actual product.
DIASYS Netmation/DIASYS Netmation4S is a registered trademark of Mitsubishi Heavy Industries, Ltd.
The service names and product names of other companies described in this catalog are the trademarks or registered trademarks of each company.